robert abbey
fine lighting

ASSEMBLY INSTRUCTIONS FOR YOUR
AARON WALL SCONCE

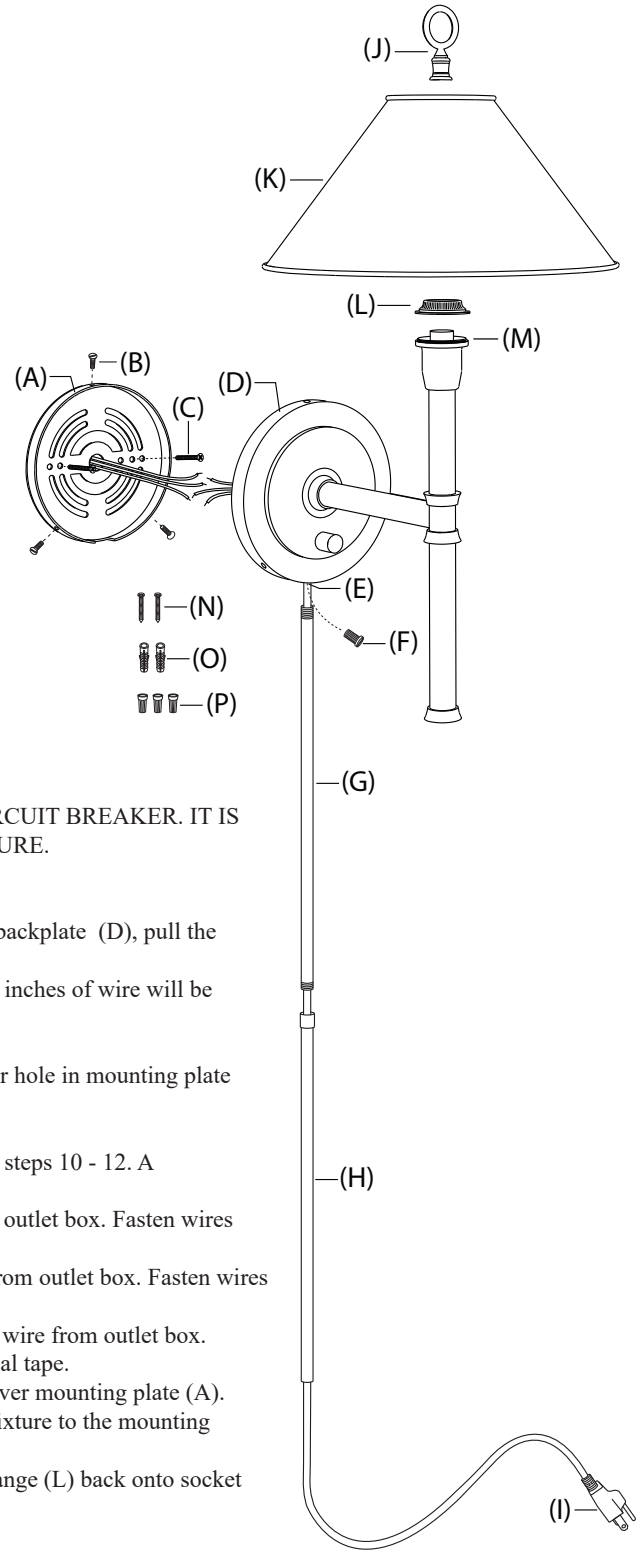

IMPORTANT SAFETY INSTRUCTIONS:

* These instructions are provided for your safety. It's important that all safety instructions are read before beginning installation of fixture.
* We STRONGLY recommend installation by a licensed electrician.
* Turn off power at switch before replacing bulbs, making sure fixture has had sufficient time to cool down.
* Do not connect the electricity until lamp is fully assembled.
* This fixture is UL rated for dry locations.

CORD COVER ASSEMBLY INSTRUCTIONS:

1. Remove mounting plate (A) from backplate (D) by removing screws (B).
2. Determine desired location for light fixture on wall. Hold mounting plate (A) in a level position against the wall. Using a pencil, mark the location of the mounting holes in mounting plate (A) onto the wall.
3. Drill small holes at marked locations on the wall. Holes should be sized so they accommodate wall anchors (O), provided. Insert wall anchors into drilled holes.
4. Affix mounting plate (A) to the wall by threading mounting screws (N) through holes in mounting plate (A) and into wall anchors (O).
5. Slide backplate (D) over mounting plate (A). Thread screws (B) back into holes at the top and sides of backplate (D) to secure fixture to the mounting surface.
6. Thread cord cover (G) into the bottom of the backplate (D). Thread cord cover (H) onto cord cover (G).
7. Follow steps 15 and 16 from Direct Wire Assembly Instructions, below.
8. Insert three prong plug (I) into wall outlet.
9. Control power to the fixture by using the switch on backplate (D).

DIRECT WIRE ASSEMBLY INSTRUCTIONS:

1. SHUT OFF MAIN ELECTRICAL SUPPLY FROM THE MAIN FUSE BOX/CIRCUIT BREAKER. IT IS RECOMMENDED THAT A LICENSED ELECTRICIAN INSTALL THIS FIXTURE.
2. Remove mounting plate (A) from backplate (D) by removing screws (B).
3. Cut three prong plug (I) from the end of the electrical cord.
4. Remove cord covers (G) and (H) from the electrical cord. From the back side of backplate (D), pull the electrical cord up through the hole in the bottom of the backplate.
5. Cut the cord to the desired length for making an electrical connection. At least six inches of wire will be needed to make proper electrical connection.
6. Thread plug (F) into the hole (E) located in the bottom of backplate (D).
7. Carefully pull the wiring from wall outlet box. Thread the wires through the center hole in mounting plate (A).
8. Affix mounting plate (A) to wall outlet box with mounting screws (C) provided.
9. Lift fixture to mounting plate and make proper electrical connections described in steps 10 - 12. A LICENSED ELECTRICIAN IS RECOMMENDED.
10. Connect ground (green or silver in color) wire from fixture to ground wire in the outlet box. Fasten wires together with wire nut (P) and tightly wrap the connection with electrical tape.
11. Attach hot wire from fixture (black in color or smooth side of wire) to hot wire from outlet box. Fasten wires together with wire nut (P) and tightly wrap connection with electrical tape.
12. Attach neutral wire from fixture (white in color or ribbed side of wire) to neutral wire from outlet box. Fasten wires together with wire nut (P) and tightly wrap connection with electrical tape.
13. Carefully push wire connections back into wall outlet box. Slide backplate (D) over mounting plate (A).
14. Thread screws (B) into holes at the top and sides of backplate (D) to secure the fixture to the mounting surface.
15. Remove flange (L) from socket (M). Place shade (K) onto socket (M). Thread flange (L) back onto socket (M) to secure shade to fixture.
16. Insert one 60W MAX. Type B, candelabra base bulb into socket (M).
17. Reconnect main electrical supply at the fuse box/circuit breaker and test fixture.

*****To clean, use soft cloth only. Do not use any chemical or abrasive cleaners.*****